STAUNCH
MACHINERY
SINCE 1979

POWER SOLUTIONS CATALOGUE

POWER SOLUTIONS PROVIDER TO OVER 60 COUNTRIES WORLDWIDE

www.staunchpower.com

A LEADING POWER SOLUTIONS PROVIDER TO OVER 60 COUNTRIES WORLDWIDE

CONTENTS

01 ABOUT STAUNCH

02 PRODUCTS LINE

03 PACKAGES & APPLICATIONS

04 GREEN TECH & HYBRID POWER

05 POWER PLANT PROJECT

06 MAINTENANCE &AFTER-SALE

01 ABOUT STAUNCH

STAUNCH POWER GENERATION

Over the past decade Staunch Machinery has grown to become a Major Player in the Power Generation industry in the MENA region and experiencing year on year growth in Australia and the Pacific Region. This growth has attracted some of the worlds leading suppliers in the power generation industry to partner with Staunch on a global scale.

In 2013, Staunch became the sole distributer of Yanmar engines in lebanon. This has allowed us to offer our customer's one of the highest quality industrial Engines in many of our power generation sets.
As a quality oriented company, one of Staunch's primary purposes is to satisfy our customer's requirement for energy in the most efficient and effective way possible, while keeping their investment costs as low as possible.

In addition to Staunch's standard range products, we also offer a complete range of Generator sets and Power solutions. Among these are:

Prime Power, Standby Power, Power Plants, Medium Voltage Power Solutions, as Well as being able to offer a comprehensive rental program that fits your power needs.

In 2017, Staunch & Himoinsa signed an agreement to develop joint Power plant project activities in the MENA region. Staunch's wide distribution network, covering over 60 countries, allows for a successful Joint project of this scale. This marks a major step for Staunch in being able to deliver large scale power projects across the globe.

Staunch Machinery is the beating heart of AL-Nahda Industrlal Group. Our long standing presence in the manufacturing of Construction Equipment and related products , combined with meeting our customers' needs in an ever changing industry, has made Staunch Machinery one of the leading companies in its domain around the MENA (Middle East & North Africa) Region and Australia. Our extensive experience in the manufacturing of construction equipment is the key to our success. Our new industrial group currently holds one of the largest ranges of construction equipment under the exclusive brand name of Staunch Machinery. You can find our products across the globe through our partners in Asia, Africa, Europe, America and Australia.

DISTRIBUTION NETWORK

Staunch Machinery's distribution network spreads across the globe to help provide "on" demand power where ever it may be required. You can find Staunch's official distributors in almost every continent worldwide; in countries such as Australia, New Zealand, Uganda, Ghana, Canada, Ireland, United States, China, Turkey, India, and KSA to name a few.

BRANDS STAUNCH CARRIES

Staunch Machinery is proud to announce that it is an exclusive distributor of YANMAR, Marelli Motori, and HIMOINSA in Lebanon. Staunch Machinery is also an exclusive OEM manufacturer of PERKINS. Other brands Staunch powers it's sets with include: FPT IVECO, CUMMINS, VOLVO PENTA and more.

YANMAR HIMOINSA THE ENERGY STAMFORD FPT POWERTRAIN TECHNOLOGIES Perkins® MarelliMotori Inspired solutions Cummins LISTER PETTER

MANUFACTURING PROCESS

Research & Development

Staunch Machinery defines Research and Development (R&D) through two connected processes:
Research: Generating new knowledge and ideas that will benefit and expand our marketplace.
Development:Turning these ideas into usable products suitable for the retail market.
Staunch machinery undertakes R&D in order to develop new products, services, and/or procedures that will help expand its operations globally.

Design

Staunch's products go through an intensive design process. Our Design Department has a method that is vigorous yet straight forward, with the first step of the process being Analysis. Staunch's team analyzes the product brief and generates preliminary concepts based oncompiled research.Concepts are then sent to the 3D Synthesis Department, whereby a 3D CAD model of the product is produced to make sure that the resulting prototype will comply with the quality and applicable safety standards from around the world. The final stage in the design process is the evaluation stage. This is whhere the team meets with the heads of the departments, evaluating the results prior to the development of the prototype.

Prototype

The prototype stage is where the product development team creates an early sample of the product. Prototyping is essential to stress testing, it serves to provide blueprints for a live, practical working system rather than a theoretical one. Creating a prototype is the critical step between the formalization and the evaluation of an approach.

Testing

Staunch Power Generation tests all its products vigorously before releasing them into market. Each generator undergoes a 1 hr factory load test at 25, 50, 75, 100, and 110% duty load. During this load test, all protection devices and control functions are simulated and checked as part of factory testing regulations; a test certificate is then provided when the generator is shipped.

Production

Staunch Machinery prides itself on delivering quality time efficient products in each of their relative fields; as such staunch produces a large number of its products in its own facilities in Lebanon, Turkey, India, and China. With a range of products covering almost all aspects of construction being produced under specific guidelines created by Staunch for its partners globally. Staunch is considered a holder of one of the widest range of construction related products in the region.

Production Technology

Staunch Machinery strives to maintain a high-standard process and in doing so, works towards a near perfect finish in its production phase. In doing so, we assemble our generator sets to the highest of standards using high-tech laser cutters and metal benders; the resulting bare metal canopy is then coated with our long-lasting and certified Powder Coating and branded in Staunch colors.

Power De-rating

When operating generators between 5 and 40C degrees in temperature and below an altitude of 1000m, the generator set can output 100% power. Any operation outside of this temperature and altitude range results in a loss of power output from the generator. Staunch Machinery ensures that all relevant calculations have been accounted for when assessing where its generators are going to be used. This ensures that the end user receives a generator that has had the Power Derating accounted for and receives a generator which can perform optimally in the particular environment that it has been placed in.

Standards

All our Generator sets comply with the international standards of design and quality. Some of these standards are:
• ISO8528 (GB/T2820-97) • ISO3046 • EN60034 • BS5000 • IEC34-1
• VDE0530 • NEMA MG1-23 • GB755 • CSA22-2 • AS/NZS3010
• AS/NZS3000 • AS/NZS1359 • AS/NZS4024
They also comply with the requirements of ISO9001, CE and TUV quality and safety standards.

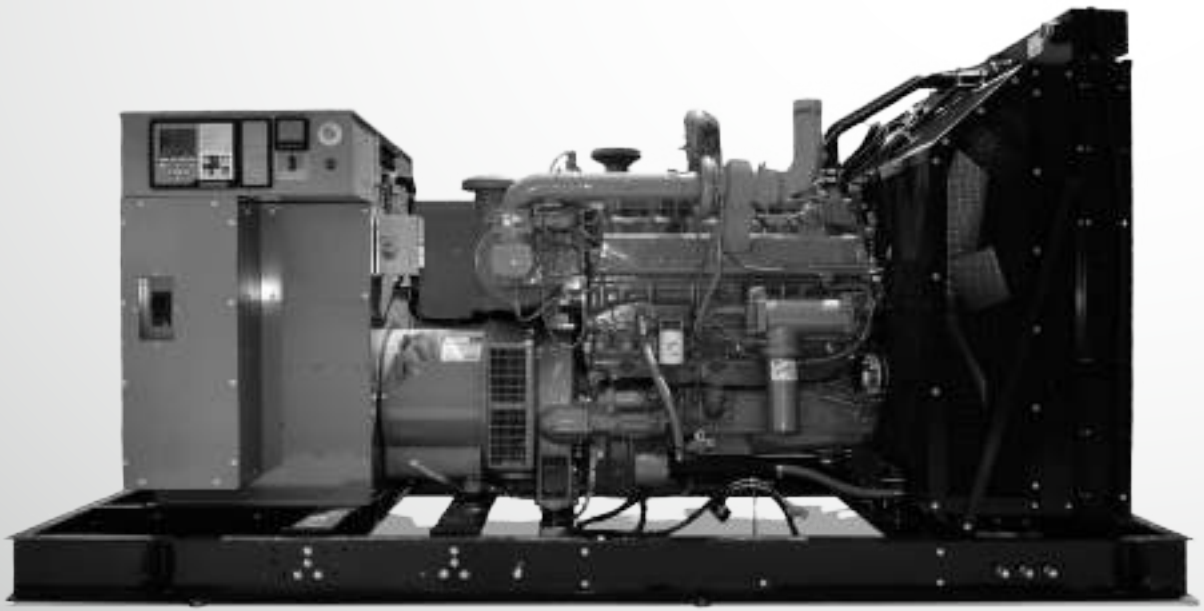

STANDARDS

Quality and Safety

All generators comply with international design and quality standards such as ISO 8528 (GB/T2820), ISO 3046, EN60034, BS5000, IEC34-1, VDE0530, NEMA MG1-23, GB755, CSA22-2, AS1459, as well as the requirements of ISO9001, CE and TUV quality and safety management standards.

Power Derating

Below 40C in temperature and an altitude of 1000m, the generator set can output 100% power. When the generator works in high temperatures and altitudes :
derate 2.0% per 300m elevation above 1000m up to a maximum elevation of 2450 mm. if the altitude is more than 2450 mm, please contact us or our dealer for help.
Temperature: derate 4.0% per 5C temperature above 40C.

Products

Staunch offers a comprehensive range of Generator Sets to provide continuous prime or standby power. These include:

- Silent type
- Open type
- Trailer type and
- Lighting Towers

The Generator Sets are normally supplied for 380/400/415/514 Volt, 3phase, 4 wire, 50/60Hz power. Other voltage and frequency settings are also available, based on customers' requirements.

Warranty

Staunch Machinery offers a standard Warranty of 1000 working hours and/or 12 months from B/L shipping date; whichever comes first. Warranty will be void if the customer breaches the instructions outlined in the Operation and Maintenance Manual. This is supported by our Service and Warranty guide.

Control System

Staunch Generator Sets are equipped with Deepsea control systems manufactured in the UK, as standard. The control system is easy to operate, reliable, safe, and powerful in its functions with a start control model and remote control system.

02 PRODUCT LINE

STAUNCH
TRANSFER SWITCHES
ATS & TOTALIZING PANELS

Control Panels and ATS

At Staunch we use advanced controller systems for our Generator Sets designed and manufactured to the highest standards and quality. These Control Panels and ATS's use state of the art technology which efficiently control and monitor our Generator Sets.

•We Offer a comprehensive line of Automatic transfer switch panels, Totalizing panels and load management systems.

Key Specifications/Special Features:

- Effectively control and monitor Generator Sets
- User-friendly interface design
- Simple and easy to use
- Fully Functional with extended service life
- Cost effective and economical
- Integrated with two independent modules – PHG

CONTROL PANELS

control system	DSE3110	DSE4510/20	DSE6010/20	DSE6110/20	DSE7310/20	DSE8610/20
Generator sets	optional	optional	optional	optional	optional(AMF)	Synchronising

DSE3110

DSE4510/20

DSE6010/20 MKII

DSE6110/20MKII

DSE7310/20

DSE8610/20

Basic Function of control Systems

echnical Data

	Control syestem DSE	3110	4510	4520	6010 MKII	6020 MKII	6110 MKII	6120 MKII	7310	7320	8610	8620
	AMF	X	X	X	X	X	X	X	X	•	X	•
	Paralleling	X	X	X	X	X	X	X	X	X	•	•
Monitor Function	Genset voltage	•	•	•	•	•	•	•	•	•	•	•
	Genset current	•	•	•	•	•	•	•	•	•	•	•
	Genset Frequency	•	•	•	•	•	•	•	•	•	•	•
	Genset speed	•	•	•	•	•	•	•	•	•	•	•
	Genset Output power	X	•	•	•	•	X	•	•	•	X	X
	Genset power factor	X	•	•	•	•	X	•	•	•	X	X
	Genset run hours	•	•	•	•	•	•	•	•	•	•	•
	Oil pressure	•	•	•	•	•	•	•	•	•	•	•
	Water temperature	•	•	•	•	•	•	•	•	•	•	•
	Battery voltage	•	•	•	•	•	•	•	•	•	•	•
	Fuel level	•	•	•	•	•	•	•	•	•	•	•
Protection	Mains voltage	X	X	•	X	•	X	•	X	•	X	•
	Mains frequency	X	X	•	X	•	X	•	X	•	X	•
	Mains current	X	X	•	X	•	X	•	X	•	X	•
	Low oil pressure	•	•	•	•	•	•	•	•	•	•	•
	Water temperature high	•	•	•	•	•	•	•	•	•	•	•
	Over speed	•	•	•	•	•	•	•	•	•	•	•
	Battery charge failure	•	•	•	X	X	•	•	•	•	•	•
	Reverse power	X	X	X	X	X	X	X	X	X	•	•

YANMAR POWERED GENSET

YANMAR POWERED GENSETS

Yanmar Co. Ltd. is a Japanese diesel engine manufacturer with more than 100 years of history. Manufacturing engines that are used in a wide range of applications, including sea¬going vessels, construction equipment, agricultural equipment and generator sets. Yanmar powered Gen Sets are known for their high levels of durability, and performance in extreme weather conditions. They produce lightweight, compact, high-power diesel engines, gas engines, and gas turbines that have superior combustion performance and reliability. Staunch is a certified OEM manufacturer of Yanmar powered generator sets ranging rom 9KVA, and the official distributor of Yanmar engines and power products in Lebanon, Tanzania, Kongo-Kinshasa and more. STAUNCH IS AN EXCLUSIVE DISTRIBUTOR OF YANMAR ENGINES IN LEBANON.

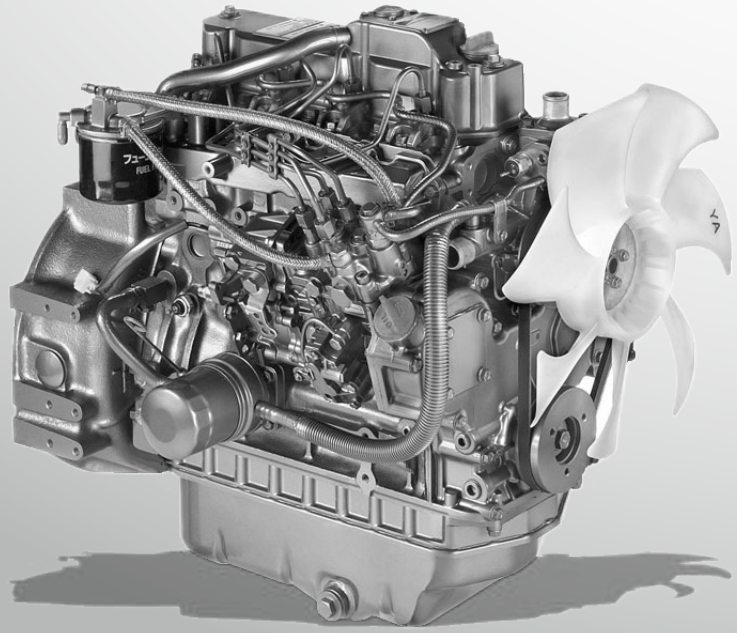

	ENGINE SPECIFICATIONS							OPEN TYPE			SILENT TYPE		CONTROL PANEL
GENSET		ENGINE YANMAR			CYLINDER			FUEL	DIMENSIONS & WEIGHT		TYPE & DIMENSIONS		MODEL
Type	Esp Kva	Prp Kva	StandBy Kw	Engine Model	Type	Cubic/ Cap.	Stroke	Consumption @75% load	LxWxH cm	KG	Canopy Type	LxWxH cm	Type
STYG 7.5	8	7.6	6.71	3TNV70	3L	0.85L	74	1 Lit/hr	125x60x95	400	STS	160x70x122	AutoDSE 4510/20
STYG 9	10	10.2	9	3TNV76	3L	1.13L	82	1.8 Lit/hr	125x60x95	400	STS	160x70x122	Auto. DSE 4510/20
STYG 15	15	16.6	14.9	3TNV88	3L	1.64L	90	2.5 Lit/hr	145x60x100	400	STS	200x75x122	Auto. DSE 4510/20
STYG 20	22	24.9	21.9	4TNV84	4L	2L	90	3.8 Lit/hr	145x60x100	460	STS	200x75x122	Auto. DSE 6110/20
STYG 35	40	38.4	33.8	4TNV98	4L	3.3L	110	5.7iLit/hr	170x70x115	520	STS	228x98x132	Auto. DSE 6110/20
STYG 45	50	47.1	41.5	4TNV98T	4L	3.3L	110	7 Lit/hr	170x70x115	800	STS	228x98x132	Auto. DSE 6110/20
STYG 60	65	63.6	56	4TNV106T GGE	4L	4.4L	125	8.9 Lit/hr	170x70x115	900	STS	228x98x132	Auto. DSE 6110/20

POWERED BY

YANMAR

PERKINS POWERED GENSETS

POWERED BY

Perkins®

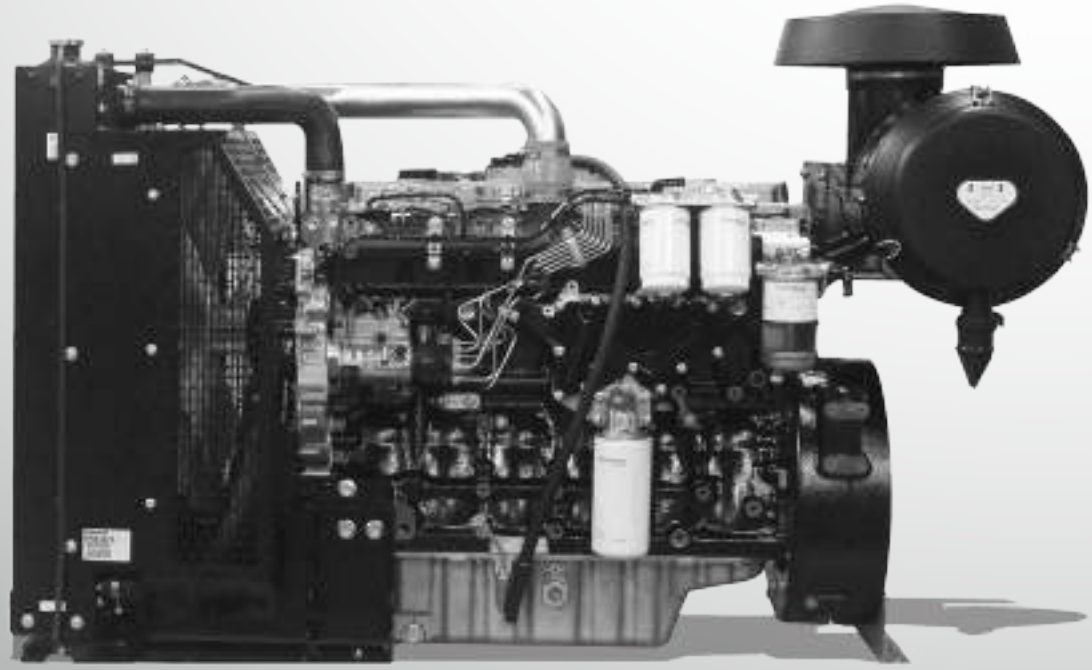

	ENGINE SPECIFICATIONS							OPEN TYPE			SILENT TYPE		CONTROL PANEL
GENSET		ENGINE PERKINS			CYLINDER			FUEL	DIMENSIONS & WEIGHT		TYPE & DIMENSIONS		MODEL
Type	Esp Kva	Prp Kva	Stand-By Kw	Engine Model	Type	Cubic/ Cap.	Stroke	CONS Lt/hr @75% load	LxWxH cm	KG	Canopy Type	LxWxH cm	Type
STPG 9	10	9	8	403A-11G	3L	1.13L	81	2.8	125x60x95	400	STS	180x75x122	Auto. DSE 4510/20
STPG 13	15	13	12	403A-15 G1	3L	2.79L	90	2.8	145x60x110	400	STS	180x75x122	Auto. DSE 4510/20
STPG 15	17	15	13.8	403A-15 G2	3L	3.11L	90	3.11	145x60x110	400	STS	180x75x122	Auto. DSE 4510/20
STPG 20	22	20	17.6	404A-22G	4L	4.8L	100	4	145x60x100	650	STS	180x75x122	Auto. DSE 4510/20
STPG 30	33	30	30	1103A-33G	3L	3.3L	127	5.61	170x75x120	760	STS	228x98x130	Auto. DSE 6110/20
STPG 45	50	45	40	1103A-33TG1	3L	3.3L	127	5.61	170x75x120	820	STS	228x98x130	Auto. DSE 6110/20
STPG 60	66	60	52.8	1103A-33TG2	3L	3.3L	127	10.4	170x75x120	820	STS	228x98x130	Auto. DSE 6110/20
STPG 80	80	80	70.4	1104A-44TG2	4L	4.4L	127	14	200x85x125	935	STS	266x105x150	Auto. DSE 6110/20
STPG 100	110	100	88	1104C-44TAG2	4L	4.4L	127	17.1	200x85x130	1150	STS	266x105x150	Auto. DSE 6110/20
STPG 135	150	135	120	1106A-70TG1	6L	7.01L	135	22.7	240x85x140	1250	STS	350x120x172	Auto. DSE 6110/20
STPG 150	165	150	132	1106A-70TAG2	6L	7.01L	135	24.7	240x85x140	1230	STS	350x120x172	Auto. DSE 6110/20
STPG 200	220	200	176	1106A-70TAG4	6L	7.01L	135	34.7	240x85x150	1670	STS	350x120x172	Auto. DSE 6110/20
STPG 250	275	250	220	1206A-E70TTAG3	6L	7.01L	135	42	280x110x170	2400	STS	390x140x212	Auto. DSE 6110/20
STPG 250	275	250	220	1506A-E88TAG3	6L	8.8L	149	42	280x110x170	2400	STS	390x140x212	Auto. DSE 6110/20
STPG 300	330	300	264	1606A-EE-93TAG5	6L	8.8L	149	48	280x110x170	2640	STS	390x140x212	Auto. DSE 6110/20
STPG 350	385	350	320	2206A-E13TAG2	6L	12.5L	157	54	340x115x180	2950	STS	480x155x240	Auto. DSE 6110/20
STPG 400	440	400	352	2206A-E13TAG3	6L	12.5L	157	62	340x115x180	3080	STS	480x155x240	Auto. DSE 6110/20
STPG 500	550	500	440	2506A-E15TAG2	6L	15.2L	171	76	370x115x190	3660	STS	480x155x240	Auto. DSE 6110/20
STPG 600	660	600	528	2506A-E18TAG1	6L	18.1L	183	90	375x155x225	4720	STS	550x200x244	Auto. DSE 6110/20
STPG 650	715	650	572	2506A-E18TAG2	6L	18.1L	183	97	375x155x225	4800	STS	550x200x244	Auto. DSE 6110/20
STPG 750	825	750	660	4006-23TAG2A	6L	22.9L	190	121	425x192x225	6100	STS	600x220x315	Auto. DSE 7310/20
STPG 800	880	800	704	4006-23TAG3A	6L	22.9L	160	130	430x174x215	6370	STS	600x220x315	Auto. DSE 7310/20
STPG 1000	1100	1000	880	4008TA-G2A	8L	30.5L	190	162	490x205x247	6100	STS	1205x234x392	Auto. DSE 7310/20
STPG 1250	1375	1250	1100	4012-46TWG2A	12L	45.8L	190	196	500x180x250	6250	STS	1205x234x392	Auto. DSE 7310/20
STPG 1500	1650	1500	1320	4012-46 TAG2A	12L	45.8L	190	234	530x220x240	10550	STS	1205x234x268	Auto. DSE 7310/20
STPG 2000	2000	2200	1600	4016-61TRG2	16L	61.1L	190	298	587x290x355	15700	STS	1050X330x392 +100	Auto. DSE 7310/20

CUMMINS POWERED GENSETS

STAUNCH PRODUCT LINE

POWERED BY

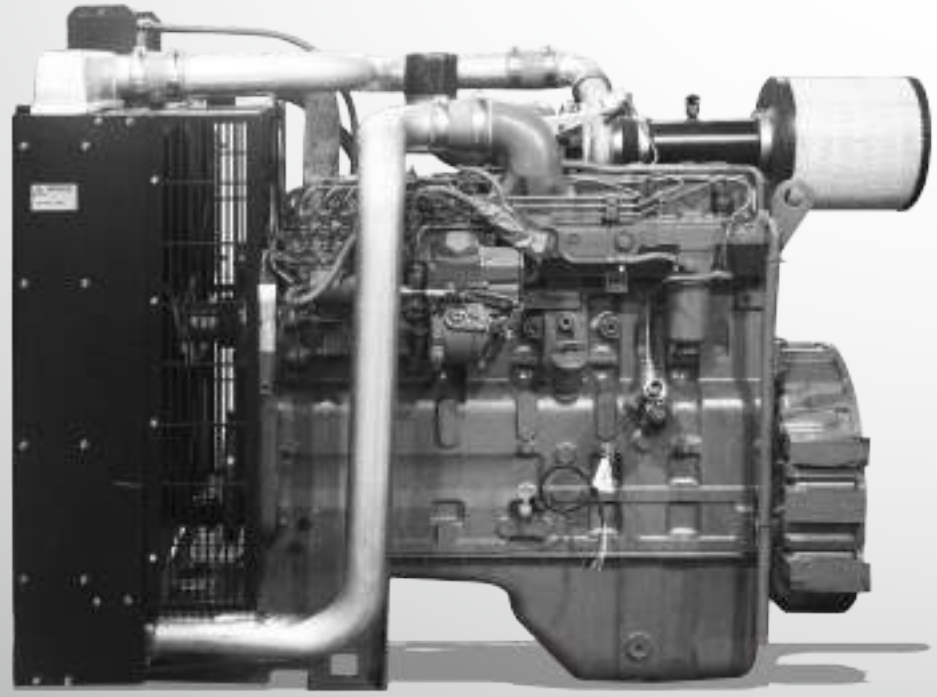

MODEL	400V 3PH THREE-PHASE		CUMMINS ENGINE						DIMENSIONS & WEIGHT			
Type KVA	Prime KVA	StandBy KVA	Model	RPM	Fuel	Cylinders	cm^3	Liters L	Length cm	Width cm	Height cm	Weight kg
100	100	110	6BTA5.9-G5	1500	Diesel	6	5900	131	152.6	81.7	126.2	505
114	114	125	6BTA5.9-G6	1500	Diesel	6	5900	131	152.6	81.7	126.2	505
136	136	150	6BTAA5.9-G6	1500	Diesel	6	5900	275	172.3	89.6	138	718
155	155	170	6BTAA5.9-G7	1500	Diesel	6	5900	275	172.3	89.6	138	718
200	200	220	6CTAA8.3-G3	1500	Diesel	6	8300	385	144	91	124	794
250	250	275	QSL9-G3	1500	Diesel	6	8800	385	162.4	106.4	146.3	861
300	300	330	QSL9-G5	1500	Diesel	6	8900	385	162.4	106.4	146.3	861
365	365	400	NTA855-G4	1500	Diesel	6	14000	600	205.5	99	153.5	1410
409	409	450	QSX15-G4	1500	Diesel	6	15000	600	226.9	133.2	166.9	1658
500	500	550	6CTAA8.3-G3	1500	Diesel	6	15000	735	370	115	210	3810
563	563	625	QSX15-G9	1500	Diesel	6	15000	815	226.9	133.2	166.9	1658
636	636	700	VTA28-G5	1500	Diesel	12	28000	735	237.1	145.7	209.2	3215
810	810	900	QSK23-G3	1500	Diesel	6	23100	N/A	297.6	165.6	196.4	3245
1000	1000	1100	QST30-G4	1500	Diesel	12	30500	N/A	300.8	142.9	227.5	3662
1250	1250	1400	KTA50-G3	1500	Diesel	16	50000	N/A	327.5	200	220	5900
1400	1400	1675	KTA50-G8	1500	Diesel	16	50300	N/A	372	200	251.6	6580
1619	1619	1875	KTA50-G9	1500	Diesel	16	50000	N/A	349.7	200	270.3	6565
2045	2045	2250	QSK60-G4	1500	Diesel	16	60200	N/A	497.9	249.4	320.1	9685
2281	2281	2500	QSK60-G6	1500	Diesel	16	60200	N/A	497.9	249.4	320.1	9685

FPT POWERED GENSETS

POWERED BY

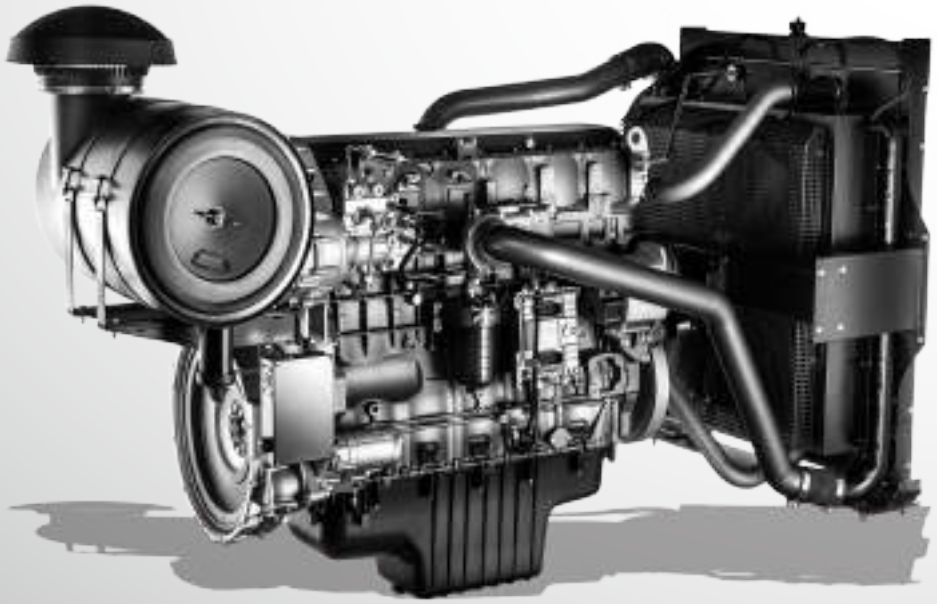

MODEL	400V 3PH THREE-PHASE		FPT ENGINE						DIMENSIONS & WEIGHT			
Type KVA	Prime KVA	Stand-By KVA	Model	RPM	Fuel	Cylinders	cm^3	Liters L	Length cm	Width cm	Height cm	Weight kg
STG G30FPT	30	33	F32AM1A	1500	Diesel	4	3200	80	150	70	109	565
STG G40FPT	42	46	N45AM1A	1500	Diesel	4	3200	160	175	80	123	662
STG G50FPT	50	55	N45AM1A	1500	Diesel	4	3200	160	175	80	123	771
STG G60FPT	65	71.5	N45SM1A	1500	Diesel	4	4500	160	175	80	131	778
STG G80FPT	80	88	N45SM2A	1500	Diesel	4	4500	220	200	80	131	893
STG G100FPT	105	115	N45TM2A	1500	Diesel	4	4500	220	200	80	138.5	988
STG G125FPT	125	137	N45TM3	1500	Diesel	4	4500	220	200	80	138.5	988
STG G135FPT	135	148.5	N67SM1	1500	Diesel	6	6700	350	250	100	164	1224
STG G160FPT	160	176	N67TM3A	1500	Diesel	6	6700	350	250	100	164	1349
STG G200FPT	200	220	N67TE2A	1500	Diesel	6	6700	350	250	100	155	1414
STG G250FPT	250	275	CURSOR 87 TE1D	1500	Diesel	6	8700	480	300	120	171.5	2090
STG G300FPT	300	330	CURSOR 10 TE1D	1500	Diesel	6	10300	480	300	120	180	2235
STG G350FPT	350	385	CURSOR 13 TE2A	1500	Diesel	6	12880	480	300	120	180	2415
STG G400FPT	400	440	CURSOR 13 TE3A	1500	Diesel	6	12880	480	300	120	178.5	2520
STG G500FPT	500	550	CURSOR 13 TE7	1500	Diesel	6	12880	480	300	120	78.5	2415
STG G650FPT	613	674	CURSOR 16 TE W	1500	Diesel	6	15900	600	375	155	225	3800

JOHN DEERE POWERED GENSETS

POWERED BY

JOHN DEERE

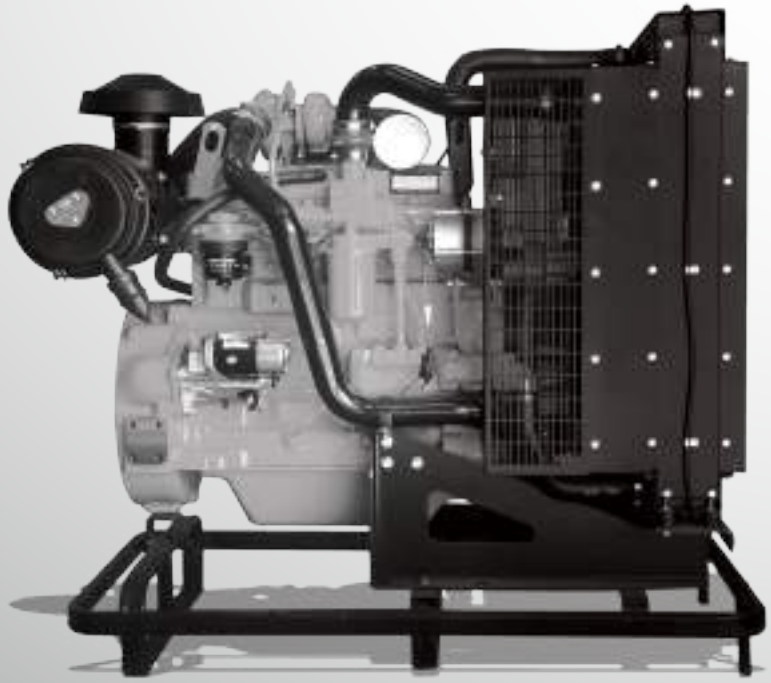

MODEL	400V 3PH THREE-PHASE		JOHN DEERE ENGINE						DIMENSIONS & WEIGHT			
Type KVA	Prime KVA	Stand-By KVA	Model	RPM	Fuel	Cylinders	Displacement Volume (Liter)	Fuel Tank Capacity (liter)	Length cm	Width cm	Height cm	Weight kg
30	30	34	3029DFU29	1500	Diesel	3	2.94	87	180	75	125	500
40	40	44	3029TFU29	1500	Diesel	3	2.94	87	180	75	125	520
70	70	78	4045TF158	1500	Diesel	4	4.52	128	210	80	130	1120
80	80	88	4045TF258	1500	Diesel	4	4.52	128	210	80	130	1150
100	100	110	4045HF158	1500	Diesel	4	4.52	131	210	80	130	1200
120	120	134	6068TF258	1500	Diesel	6	6.78	275	250	90	140	1250
150	150	164	6068HF158	1500	Diesel	6	6.78	275	250	90	140	1535
180	180	200	6068HF258	1500	Diesel	6	6.78	275	310	115	165	1750
200	200	220	6068HFU20C (mechanical)	1500	Diesel	6	6.8	275	310	115	165	1850
250	250	275	6068HFU55	1500	Diesel	6	9	385	310	115	165	2205
300	300	330	6090HFU84	1500	Diesel	6	9	385	310	115	165	2350
450	450	495	6135HF475	1500	Diesel	6	13.5	704	360	120	220	3500

VOLVO POWERED GENSETS

STAUNCH PRODUCT LINE

POWERED BY

VOLVO PENTA

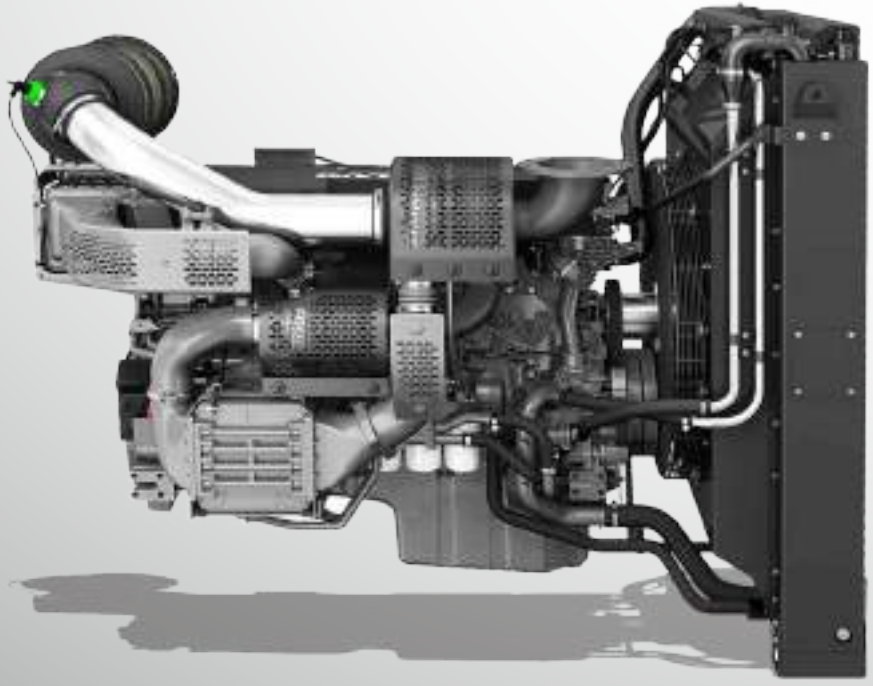

MODEL	400V 3PH THREE-PHASE		VOLVO ENGINE						DIMENSIONS & WEIGHT			
Type KVA	Prime KVA	StandBy KVA	Model	RPM	Fuel	Cylinders	cm^3	Fuel Cons. at 100% (L/h)	Length cm	Width cm	Height cm	Wet Weight kg
100	99	79	TAD 531 GE	1500	Diesel	4	4760	22.3	152.6	76.3	125.0	606
135	132	105	TAD 532 GE	1500	Diesel	4	4760	29.0	159.8	86.6	124.2	606
150	150	120	TAD 731 GE	1500	Diesel	6	7150	34.0	185.5	86.6	129.2	804
180	186	149	TAD 732 GE	1500	Diesel	6	7150	40.6	185.7	100.3	145.5	826
200	204	163	TAD 733 GE	1500	Diesel	6	7150	45.5	186	100	145.5	826
250	250	200	TAD 734 GE	1500	Diesel	6	7150	52.5	186.5	105.8	132.0	788
315	316	253	TAD 1341 GE	1500	Diesel	6	12780	61.6	220.6	111.4	139.1	1790
350	350	280	TAD 1342 GE	1500	Diesel	6	12780	69.3	220.6	111.4	139.1	1790
375	291	305	TAD 1343 GE	1500	Diesel	6	12780	74.7	220.6	111.4	139.1	1790
400	410	328	TAD 1344 GE	1500	Diesel	6	12780	82.3	220.6	111.4	139.1	1790
450	450	360	TAD 1345 GE	1500	Diesel	6	12780	91.1	220.6	111.4	139.1	1790
500	505	404	TAD 1641 GE	1500	Diesel	6	16120	102.5	3314.1	112.0	158.7	2020
590	574	459	TAD 1642 GE	1500	Diesel	6	16120	115.5	226.9	112.0	158.7	2020
630	634	508	TAD 1643 GE	1500	Diesel	6	16120	127.7	325.5	135.0	193.0	2370

GDE POWERED GENSETS

POWERED BY

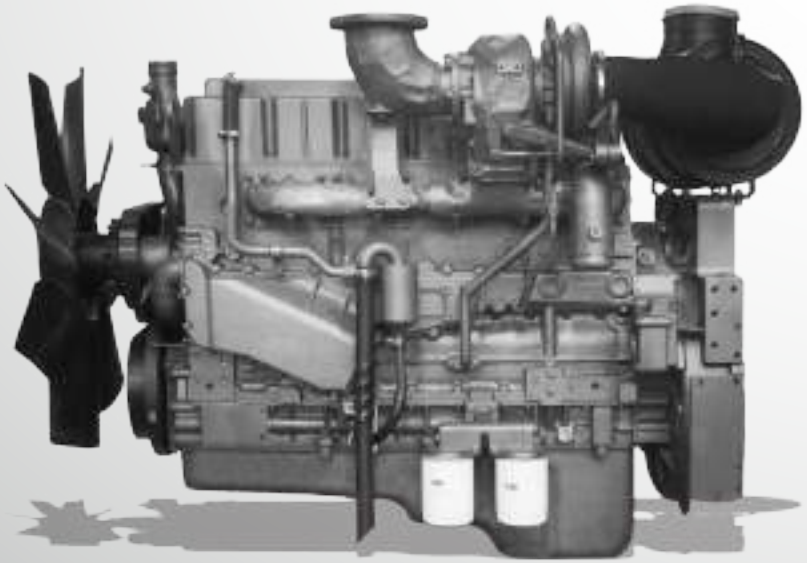

MODEL	400V 3PH THREE-PHASE		GDE ENGINE						DIMENSIONS & WEIGHT			
Type KVA	Prime KVA	StandBy KVA	Model	RPM	Fuel	Cylinders	cm³	Bore & Stroke (mm)	Length cm	Width cm	Height cm	Dry Weight kg
9	9	10	3C 11 G3/A	1500	Diesel	3	1067	76 x 78.4	77.8	45.4	70.6	140
20	21	23	4D 24 G2/A	1500	Diesel	4	2450	87 x 103	98.2	52.4	80.4	240
30	35	38	4D24TG0/A	1500	Diesel	4	2450	87 x 103	99.6	52.4	80.4	265
40	41	45	YC4D60-D21	1500	Diesel	4	4210	108 x 115	130.0	89.7	97.0	370
57	58	63	YC4D85Z-D20	1500	Diesel	4	4210	108 x 115	130	89.7	97.0	370
60	62	68	YC 4D 90Z - D21	1500	Diesel	4	4210	108 x 115	130.0	89.7	97.0	370
75	75	83	YC4A 100Z-D20	1500	Diesel	4	4840	108 x 132	133.0	75.0	108.0	465
100	97	107	YC 6B 135Z - D20	1500	Diesel	6	6871	108 x 125	156.0	85.0	113.0	650
150	151	166	YC 6B 205L - D20	1500	Diesel	6	6871	108 x 125	172.0	90.0	120.0	700
250	258	284	YC 6MK 350L - D20	1500	Diesel	6	10340	123 x 145	208.8	113.0	139.2	1030
300	300	330	YC 6MK 420L - D20	1500	Diesel	6	10340	123 x 145	208.8	113.0	139.2	1030
325	325	358	YC 6MJ 480L - D20	1500	Diesel	6	11730	135 x 145	210.0	113.0	145.0	1030
350	356	391	YC 6MJ 480L - D20	1500	Diesel	6	11730	135 x 145	210.0	113.0	145.0	1030
500	500	550	YC 6T 660L - D20	1500	Diesel	6	16350	145 x 165	248.8	124.0	168.8	1980

03 PACKAGES & APPLICATIONS

03 PACKAGES & APPLICATIONS

PACKAGES & APPLICATIONS

STAUNCH Power Solutions can cover all your power requirements, no matter what they may be. Staunch has a dedicated product line for a wide range of applications, be it in a rural jungle in need of telecom specific power generation, a high capacity factory in need of industrial grade power solutions, for back-up off grid solar applications or for a home in a developing country where power outages are random and frequent; Staunch's stand-by power generation units are always ready to meet the task.

SCORPION PACKAGE
STAUNCH TOWER LIGHT

MAIN SPECIFICATIONS		ST4000Y	ST4000LP	ST4000P
ENGINE				
ENGINE BRAND		**YANMAR 3TNV70**	**LISTER PETTER LPW3**	**PERKINS 403A-11G**
Type		Water cooled diesel engine	water cooled diesel engine	water cooled diesel engine
Engine Speed	rpm	1500	1500	1500
Frequency	Hz	50	50	50
No. of Cylinders		3 in line	3 in line	3 in line
Rated Power	KVA	7.5	13	9
	KW	6	10.4	7.2
Fuel Consumption @50% Load	L/H	1.2	1.7	1.7
ELECTRICAL				
ALTERNATOR MODEL		**Staunch SLG 164D / STAMFORD S0L1-H1**	**Staunch SLG 164D / STAMFORD S0L1-H1**	**Staunch SLG 164D / STAMFORD S0L1-H1**
Circuit		Hard Wired	Hard Wired	Hard Wired
Voltage	VAC	110/220	110/220	110/220
DIMENSION				
Height: Mast Loaded	mm	2450	2450	2450
Height: Mast Raised	mm	8000	8000	8000
Width	mm	1270	1270	1270
Wheels and Tires	inch	13	13	13
TOWER				
Rotation		340	340	340
Lighting		4X1000 watt metal halide fixture	4X1000 watt metal halide fixture	4X1000 watt metal halide fixture
Mast Operation		Manual	Manual	Manual
STABALIZER				
		Five point design	Five point design	Five point design
		2 rear 2 front and wheel jack	2 rear 2 front and wheel jack	2 rear 2 front and wheel jack

SCORPION PACKAGE

The Lighting Tower

SCORPION PACKAGE

STAUNCH's Lighting Towers are ideal for any construction site, rescue site, mining and many more applications. The robust and flexible design makes STAUNCH's Lighting Towers easily adopted by international rental companies, contractors and NGOS.

STANDARD FEATURES

- 2mm steel powder coated canopy
- Metal halide lamps 400w/1000w
- 4 Stabilizing jacks
- Silent enclosure
- Mechanical winch mast

OPTIONAL FEATURES

- Customized package
- LED lamps
- Additional lamps
- 9M and above mast
- Hydraulic mast
- Over size generator to power site Equipment
- Photo cell
- Digital fuel sensor
- Remote monitoring
- Water jacket heater
- Anti condensation heater
- Socket outlets
- Surge breakes
- Secondary aux tower

WOLF PACKAGE
SILENT CANOPY

WOLF PACKAGE PREMIUM

At staunch, we have your needs in mind when providing power solutions, as such we offer a wealth of standard and optional features specific to your needs. The wolf pac premium is our flagship standard. Silent canopy with all the ergonomic features that suits most applications using premium materiel, accessories and products.

Noise Sound Level
75 DB@ 1 meter

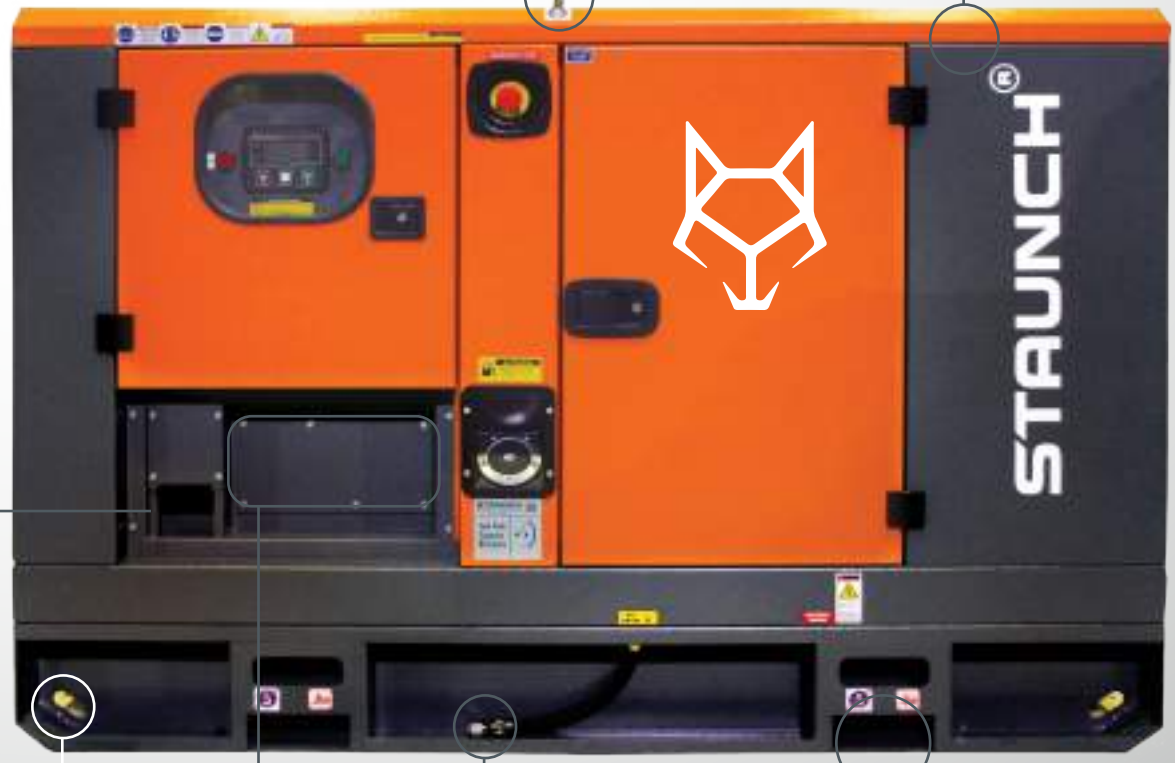

SINGLE LIFTING POINT

WATER SEAL

CABLE ENTRY

TIE DOWN HOLES

OPTIONAL SOCKET PANEL

OIL EXTRACTION HOSE

FORKLIFT POCKET

WOLF PACKAGE
SILENT CANOPY

WOLF PACKAGE COMPACT

Our wolf Pac compact package is designed to help deliver the right amount of power at the right time. Designed to perform in most standby application the compact set is tailored mostly for back-up situations keeping in most ergonomic features for the canopy design however making it more economic considering the low number of operation intended for the set.

Noise Sound Level
75 DB@ 1 meter

OWL PACKAGE

SUPER SILENT CANOPY
ULTRA-QUITE

OWL PACKAGE

Inspired by the owel's ultra-silent flight mode, these canopies are known to be whis-per quite, these canopies are most favoured by power rental companies and urban site appli-cations, where noise levels are critical for the operators.

Noise Sound Level
65 DB@ 1 meter

WATER SEAL

LIFTING POINTS

DOUBLE RUBBER SEAL
DOOR PANELS

SOUND ABSORPTION
FILTER

INSULATED BASE
FRAME

FORKLIFT POCKETS

Air
INLET LOUVER

ALLIGATOR PACKAGE

Designed to address today's demands in saving space and easy transportation. The stackable design skid makes it perfect to stack open type generators on top of each other save warehousing space, shipping cost and provide extra protection for your generator.

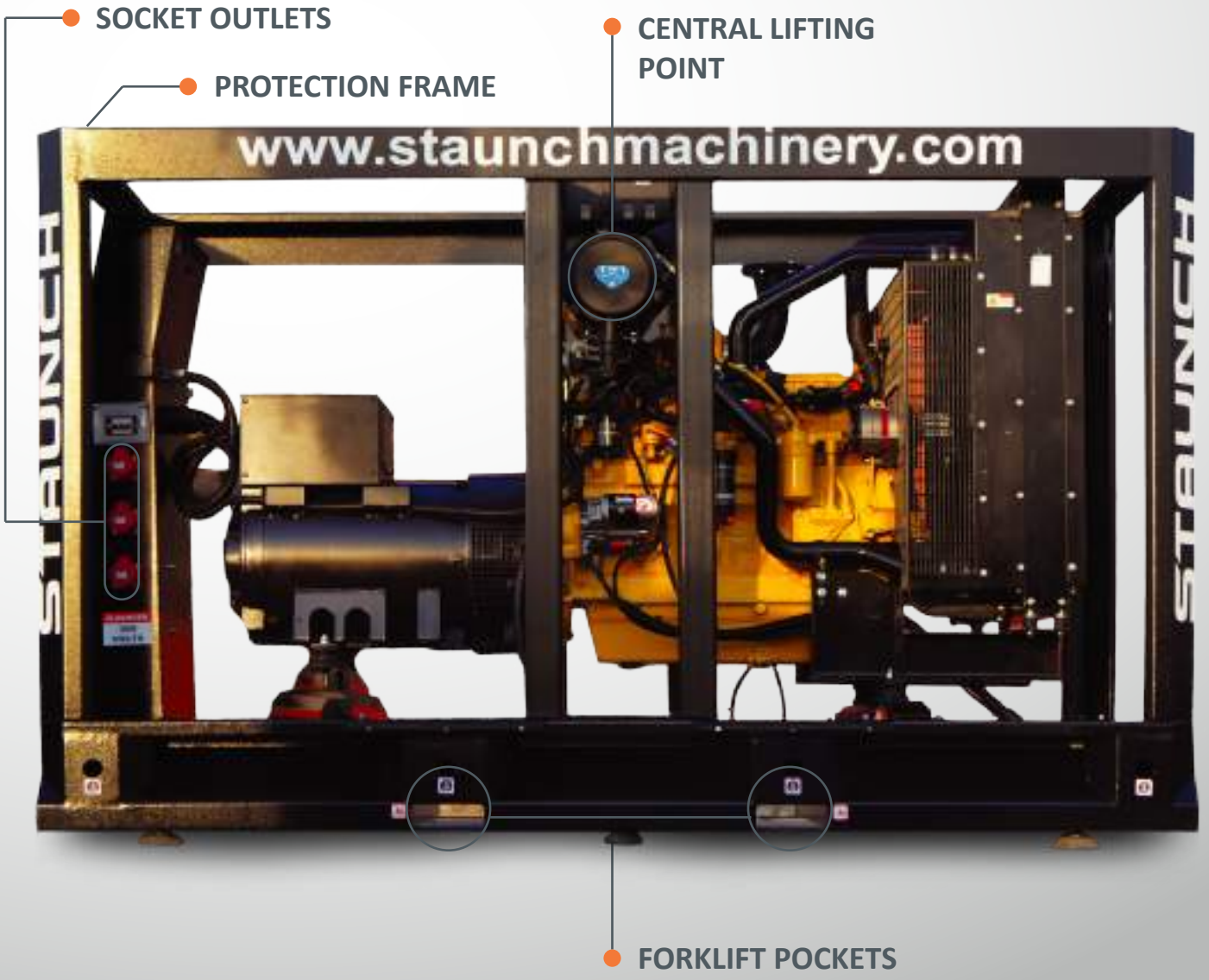

RHINO PACKAGE
THE RENTAL SET

RHINO PACKAGE

Built as tough as a rhino, our rental type generator sets are designed and tailor made for the sever conditions of the rental industry. Taking on daily movements and variable sites and applications, the Rhino package has to be as resilient as possible.

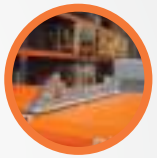

Double Lifting Point Design

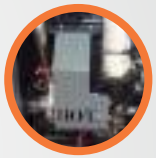

Heat Shielding

Water Tight Rubber Gasket

Hour Meter

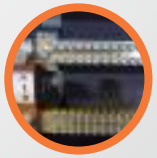

MEN
Multiple Earth Neutral

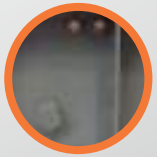

Fuel Outlet.
Bund Drain.

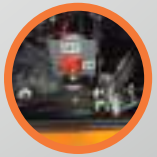

Battery Isolator Switch

Forklift Pockets

Drag Bar

BAT PACKAGE
FOR THE TELECOM OPERATORS

BAT PACKAGE

Staunch has a dedicated line of Telecom compliant Power Generators specifically suited for rural areas requiring a constant source of power enabling the provision of reliable energy to telecom towers. Emc shielded canopies make Staunch's silent and Ultra Silent sets the ideal generator units to power telecom sites. Extra features such as long service kits, anti-theft canopies, remote controlling and communication units are also available as per client demand.

Noise Sound Level
- 55 dBa @ 7 m at Full Load
- High/ Low Frequency Attenuation

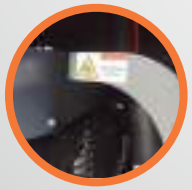

Safety Guards
- Prevent Operation Injuries
- IP21/23 Protection

Exhaust Silencer
- Protection Against Heat
- Reduce Heat Emission
- Exhaust Noise Reduction

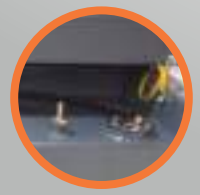

Storage Fuel Tank
- Up to 1200 L Bulk Fuel Tank
- 3 mm Black Steel
- Fuel Level Monitoring

DSE 7320 AMF Control Panel
- Engine Parameters Monitoring
- Alternator Parameters Monitoring
- Integrated PLC Functions
- MODBUS - RTU Integration

Built In Automatic Transfer Switch
- Mains Power Monitoring
- Phase Sequence protection
- Phase Failure Protection

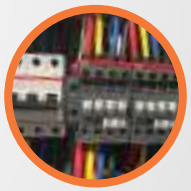

Remote Monitoring Module
- Web Monitoring via GSM/Ethernet
- Mobile Based Application
- Data Logging & Reporting

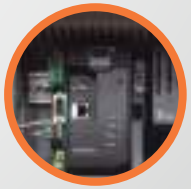

Anti-vibration Pads
- Reduce Noise Vibration
- Reduce Weight Pressure On Tank
- Prevent Vibration Transmission

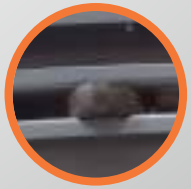

Anti-Theft Canopy Style
- Internal Hinges
- Audible Alarms for Doors
- Internal Door Handles

ARMADILLO PACKAGE
THE CONTAINERIZED SETS

ARMADILLO PACKAGE

Complete ready to go solutions are accommodated into the containerized canopies to reduce unit footprint and facilitate transportation and set up. These solutions and options can include complete set with cooling pack, switch gears, transformer, fuel treatment system and even a fuel tank.

- 40” AND 20” OPTIONS
- SILENCED OR SUPER SILENT
- CERTIFIED FOR INTERNATIONAL SHIPPING

BEDOUIN PACKAGE
ON TRAILER TYPE

BEDOUIN PACKAGE

We cater to the requirements of the customers from all over the world, many of which needs the generator to be mobile. That is why here at staunch we have created the Bedouin package, which is basically a generator on a towable trailer making your power source always ready for the next job site.

RESIDENTIAL APPLICATION

RESIDENTIAL ULTRA SILENT CONSTANT POWER

Staunch's residential power generator sets are the perfect fit for any home. Packed in an Ultra Silent canopy with a fully comprehensive manual, on-site installation manual and warranted service, Staunch's residential solutions will light up your home all year long. It features a Certified Powder Coated Canopy design with a Power Decibel rating of 54.9 dB @ 7m rated at 50C degrees ambient temperature. No other generator can match its performance and value for money

STANDARD FEATURES

- Ultra-silent canopy 55DB@7m - 65DB@ 1m
- 2mm steel powder coated canopy
- 3mm steel powder coated bas frame for canopies up to 250 kva
- Forklift pockets.
- Quad lifting points

OPTIONAL FEATURES

- Fully customizable canopy design.
- Bunded fuel tank
- Guarding & shielding according To As4024
- Battery isolator switch
- Digital fuel sensors
- Remote monitoring
- Wall mounted ATS
- Built in ATS
- Battery trickle charger
- 3 Ph or 1 ph connection
- Anti-condensation heater
- Water jacket heater
- Extendable fuel tank up to 1000L

RENTAL APPLICATION

RENTAL RELIABLE SECURE POWER

Not every home or business needs a generator 100% of the time, that's why Staunch has a select line of generator sets specific to on site long and short term rental applications. With its wide range of Rental Spec units, Staunch can supply a generator to suit varying applications from high load, ultra silent, back up or prime power to be used in all types of weather and locations. Staunch Machinery has a wealth of projects and experience on site installations. Some of our featured projects are listed below; these projects include installations in rural areas, residential set-ups, industrial manufacturing and much more.

STANDARD FEATURES

- 2mm steel powder coated canopy
- 4mm steel powder coated base frame for canopies up to 500 kva
- 6mm forklift pockets.

OPTIONAL FEATURES

- External socket outlets
- MEN Multiple Earth Neutral
- Fully customizable canopy design.
- Single, double or quad lift point design.
- Bunded fuel tank
- Drag bar.
- Guarding & shielding according to As4024
- Removable canopy
- Battery isolator switch
- Digital Fuel sensors
- Remote Monitoring
- 3 way valve fuel
- Dual voltage switch
- Anti condensation heater
- Radiator water level switch
- Automatic transfer switch
- Trailer mount
- PMG exciter
- Removable fuel tank
- 4 pole breaker
- Water jacket heater
- Oil suction pump
- Radiator service door panel

INSULATED ROOMS

STAUNCH has developed an innovative solution to pre-fabricate generator room to comply with some of the industry's strictest rules and regulations.
The highly engineered and studied generator rooms are easy to set up and assemble at any location.

STANDARD FEATURES

- Black steel + fiber insulator & black steel perforated sheet
- Residential silencers
- Attenuators for fresh & hot air
- Mezzanine for muffler
- Insulated door
- Standard fuel connections system
- Anti-vibration pads rubber type
- Standard exhaust system

OPTIONAL FEATURES

- Galvanized steel + Rockwool insulation (fire Related) + galvanized perforated sheet
- Gravity dampers
- Motorized fire smoke damper
- Ducts
- Extraction fans
- Critical silencers
- Exhaust system (stainless steel pipes, expansion joints, vibration pads...
- Exhaust filters (carbon filter, cyclone filter, catalytic filter & soot filter)
- Ant-vibration pads (sylomer, spring isolators & seismic spring isolators)
- Fuel system protections (solenoid valves, fuel control panel, pump, float switches-,...etc).

POWER PLANT PROJECTS

BioDiesel BIODIESEL COMPLIANT

POWER PLANT PROJECT

In 2017, Staunch & Himoinsa signed an agreement to jointly develop the power plant projects activities in the MENA region and throughout Staunch's network in over 60 countries. In order to expand its power plant division, staunch management decided to create a department focusing on the following main activities:

- Conventional Power Generation and Renewable Solar
- Hybrid Power Generation.

Medium Speed Generating Sets are the ideal diesel solution for prime, peak and Black Start applications. In the particular case of black start applications, the purpose of the BSDG(what does this stand for) system is to provide auxiliary power to enable the start up of the power plant main generating units (Turbines) and to restore the power station to operation without relying on auxiliary power from the grid. Our design and engineering team is composed of highly skilled and experienced engineers who are committed to providing our clients class leading service and solutions at all times. Our Engineering Department assigns a dedicated team to each project and follows Staunch's strict guidelines and standards every step of the way

MEDIUM SPEED HEAVY FUEL ENGINES

Medium Speed Generating Sets are the ideal diesel solution for prime, peaking and Black Start applications. In the particular case of black start applications, the purpose of the BSDG system is to provide auxiliary power to enable the start up of the power plant main generating units (Turbines) and to restore the power station to operation without relying on auxiliary power from the grid.

DESIGN & ENGINEERING

Our design and engineering team is composed of skilled and experienced engineers who are committed to providing client satisfaction at all times. Our Engineering Department assigns a dedicated team to each project and follows Staunch's strict guidelines and standards every step of the way.

CONTAINARIZED OR POWERHOUSE

Staunch Power Plant Division can be your reliable partner in any business model ranging from pure EPC (Engineering Procurement Construction) to BOT (Built Own Transfer).

Staunch's Power Plant Division is proud to provide YANMAR powered plants with ranges reach-ing up to 4MW, all created under Himoinsa's strict guidelines and standards.

Staunch's Power Plant Configu-ration can be custom-ized with solutions based on client needs and developed by our engineering team.

Staunch's Power Plant Projects provides high speed diesel, gas generator sets; among them are Staunch and Himoinsa from 5kw to 2000 KW powered by reputable engine providers such as Perkins, FPT, and more.

Staunch's Modular Power Plant Configuration is mainly based on the containerized model for a quick plug and play solution.

Powerhouse configuration is based on EMC (Electro Mechanical Construction) for Balance of Plant (BOP) properties

CRITICAL APPLICATION

CRITICAL LOAD APPLICATIONS

Staunch Machinery provides a comprehensive solution for prime and standby power generation from 10-3000kva on bank and hospital facilities. Standby power sources are usually used
When main power shuts down. Staunch's generator sets are designed to work in indoor and outdoor environments, and meet the requirements of banks and hospitals. These requirements include noise cancellation canopies, safety compliant operation, static electricity and electro-magnetic interference compliance and more.
High quality generator sets with auto control function can be paralleled to reach desired power output. ATS equipment on every generator set ensures immediate switch and start when
the main power source shuts down. With auto remote control function, genera-tor set real time operation parameters and state can be monitored, and machinery will give immediate alarm to monitor equipment should faults occur.

- Working altitude suitable for up to 3000m altitude
- Working temperatures with minimum of approximately -60'C (engine heater) and maximum of 50'C
- Soundproof/Container type generator designed to be rust-proof and effectively shield rain/sand/rock from entering the canopy whilst still maintain-ing sufficient air intake.
- 30-40% and up to 80% noise level reduction compared to open type gen-sets.
- Auto-fuel- transfer system ensures engine runs continuously by Transferring fuel from external tank to basement tank.
- Standard base fuel tank can work up to 8 hours; large base fuel tank can extend working hours from 12to 24hours and an auto fuel transfer System, based on customer request.

INDUSTRIAL APPLICATION

BioDiesel BIODIESEL COMPLIANT

INDUSTRIAL POWERFUL SOLUTIONS

Staunch's line of industrial generator sets are the excellent solution to power any industrial application needed, with a wide range of power ratings, extensive features, and durable quality, staunch set the standard when it comes to industrial grade power generation. The industrial line features the ultra silent canopies, custom built silent generator rooms, modular units with built in switch gears, biodiesel compliant sets for higher efficiency and greener enviromental impact.

STANDARD FEATURES

- 2mm steel powder coated canopy
- 3mm steel powder coated base frame for canopies up to 500 KVA
- 6mm Reinforced forklift pockets.

OPTIONAL FEATURES

- Peak load lopping
- Residential mufflers
- Fully customizable canopy design.
- Single, double or quad lift point design.
- Document pocket for service manuals.
- Bunded Chassis
- Guarding & shielding according to As4024
- Battery isolator switch
- Digital fuel sensors
- Remote Monitoring
- Wall mounted ATS
- Load sharing system
- Battery trickle charger
- External fuel tank
- Totalizing panel
- Manual oil suction pump
- 4 pole breaker
- Water level
- Catalytic and carbon soot filter

AGRICULTURE APPLICATION

AGRICULTURAL FARM-READY SOLUTIONS

Staunch Machinery offers an exclusive line of agriculture ready generator sets well suited for semi-rural and rural areas. The range features specs like ultra silent canopies, fuel efficient engines, remote control, emergency- power off, remote on/off switches and much more.

STANDARD FEATURES

- 2mm steel powder coated canopy
- 3mm steel powder coated base frame for canopies up to 250KVA

OPTIONAL FEATURES

- Document pocket for service manuals.
- Bunded fuel tank
- Guarding & shielding according to As4024
- Battery isolator switch
- Solar charger
- Digital fuel sensors
- Remote monitoring
- Anti-condensation heater
- Water heater
- PMG exciter
- Over size alternator
- Bird rodent mesh protection
- Built-in ATS

MINING APPLICATION

MINING POWERFUL SOLUTIONS

Staunch provides comprehensive solutions for prime/standby power generation on mining sites. Staunch generators are designed to withstand the harshest weather conditions, whilst maintaining highly efficient and reliable uptime 24/7 on site. Staunch generator sets are able to operate continuously for 7000 hours per year. With auto remote control function, real time monitoring of operation and status, and real-time warnings should a fault occur. Customizable to your environment:

•Working altitude suitable up to 3000 meters

•Working temperature with a minimum of approximately -60'C (engine, alternator heater) and maximum around 50'C • Soundproof/Container type generator designed to be rust-proof and effectively shield rain/sand/rock from entering the canopy whilst still maintaining sufficient air intake.

•Large base fuel tank to extend working hours to 12 hours or 24 hours, and an auto fuel transfer system, based on customer request.

STANDARD FEATURES

•4mm steel powder coated canopy
•6mm steel powder coated base frame for canopies up to 500 kva
•Reinforced forklift pockets.

OPTIONAL FEATURES

•Fully customizable canopy design.
•Single, double or quad lift point design.
•Document pocket for service manuals.
•Bunded fuel tank
•Drag bar.
•Guarding & shielding according to As4024
•Removable canopy.
•Battery isolator switch
•Oil life extension system
•Fuel saving system
•Lightning protection
•Oil suction pump
•Dust resistant canopy
•Plug connector
•Radiator water level switch
•Anti condensation heater
•Digital fuel sensors
•Remote monitoring
•Stainless steel fittings
•4 Pole breaker
•2 Pole lockable battery isolator
•External socket outlets
•3 Way valve fuel
•Double insulated wiring
•PMG exciter
•Built in ATS
•Trailer mount
•MEN Multiple Earth Neutral
•Water jacket heater
•Radiator service door panel
•Automatic transfer switch

MILITARY APPLICATION

MILITARY CAMOUFLAGE SOLUTIONS

Our range of camouflaged Ultra-Silent power solutions are perfect for your military power needs; featuring remote on/off switches, remote monitoring, ultra fuel efficiency, super silent canopies, and more..

STANDARD FEATURES

- 2mm steel powder coated canopy
- 3mm steel powder coated base frame for canopies up to 250 KVA
- Camouflage powder coat
- Reinforced forklift pockets.

OPTIONAL FEATURES

- Fully customizable canopy design.
- Single, double or quad lift point design.
- Document pocket for service manuals.
- Bunded fuel tank
- Drag bar.
- Guarding & shielding according to As4024
- Removable canopy. •Battery isolator switch
- oil life extension system
- fuel saving system
- Built in ATS up to 20kva
- Remote monitoring
- Digital fuel sensors
- Dual frequency

MARINE APPLICATION

MARINE POWER SOLUTIONS

Staunch Power offers a comprehensive range of marine specific generators to be used for Auxiliary power and for emergency backup application. This range is highly customized and built to spec for each application and placement on the vessel with high anti-corrosion characteristics.

STANDARD FEATURES

- 2mm steel powder coated canopy
- 3mm steel powder coated base frame for canopies up to 250 KVA
- Camouflage powder coat
- Reinforced forklift pockets.

OPTIONAL FEATURES

- Fully customizable canopy design.
- Single, double or quad lift point design.
- Document pocket for service manuals.
- Bunded fuel tank
- Drag bar.
- Guarding & shielding according to As4024
- Removable canopy. •Battery isolator switch
- oil life extension system
- fuel saving system
- Built in ATS up to 20kva
- Remote monitoring
- Digital fuel sensors

TELECOM APPLICATION

TELECOM EMC COMPLIANT GENERATORS

STAUNCH has completed many successful projects with private telecom companies and governments around the world. Listed are a few of these companies.

STANDARD FEATURES

- 4mm steel powder coated canopy
- 6mm steel powder coated base frame for canopies up to 500 kva
- Reinforced forklift pockets.
- Zinc coated steel

OPTIONAL FEATURES

- Fully customizable canopy design.
- Single, double or quad lift point design.
- Document pocket for service Manuals.
- Bunded fuel tank
- Guarding & shielding according to As4024
- Removable canopy.
- Battery isolator switch
- Oil life extension system
- Fuel saving system
- Oil suction pump
- Anti-theft canopy
- Ultra silent canopy
- 1 Phase or 3phase connection
- Dual voltage switch
- Solar battery charger
- Water jacket heater
- Anti-condensation heater
- Extendable fuel tank
- Bird rodent mesh protection
- Built in ATS

HYBRID POWER GENERATION

Telecommunication operates in Africa, India and other developing countries face severe changes in powering mobile bas stations (BTS) sites in remote areas. In many cases the sites are simply too far from the AC grid for AC mains powering to be economic. Other sites have AC power, but it is extremely unreliable. These sites are often powered by small diesel generator sets, running continuously. Sealed lead acid (VRLA) batteries provide backup power to generator maintenance, start up and cover the occasional case when fuel runs out. Ongoing costs are high and include: Direct fuel cost, truck rolls, refueling is usually needed every one or two weeks at a high cost for every remote site. Generator maintenance. Generator replacement. In continuous duty a small generator may only last two years. By changing the way the generator is controlled, an operator can achieve significant savings in running costs. This is referred to as “hybrid operation”, where the generator only runs part of the time, and the battery runs the load while the generator is off. For that purpose we offer our range of hybrid power solutions that are fully customized to fit every customer’s need or request, to reach maximum efficiency

FOR OFF-GRID APPLICATIONS POWERED BY DIESEL GENERATORS, MOVE TO CYCLIC OPERATION TO SAVE COSTS

APPLICATION	Control and power management of variable speed hybrid generators with full control of the battery charging process
VOLTAGE	Designed for systems at +48dc or -48dc
RATING	kW 12
CURRENT	220 A
CONTROLLER	To control the whole system Totally programmable 3 steps battery charging curve System voltage regulation obtained through speed control Overtakes the traditional inverter function Automatic engine start and stop Designed for hybrid generators management Includes fuel consumption monitoring function state of the art remote monitoring capabilities, with included Modbus communication, TE-monitor software and app for android devices, GSM and internet remote control as optional
ALTERNATOR	3Ph model: PMG140K Couplings: J609b; Bell SAE 6-5-4 with disks SAE and 7,5 6,5 Special fast coupling system Speed range: approx. 1500-3000rpm Frequency: 450Hz @ 3000rpm Insulation Class H - temperature rise F - IP20 Includes double rotational speed detection
SPEED GOVERNER	Made by Woodward
EFFICIENCY RECTIFIER	3Phase full wave rectifier bridge with on-board electric fan
OPERATING TEMPERATURE	-200 C to +400 C (up to +600 C with de-rating 85%>)
ACCORDING TO	IEC 60034-1 - EN 61000-6-2 - EN 61000-6-4
POWER PANEL	Designed to manage up to 4 power sources)Battery - Generator - Mains - Aux (Solar/Wind(Includes Hall sensors for DC current measurement Includes overvoltage fast protection Includes quick connectors Rack design

GREEN TECH & HYBRID POWER

Staunch Machinery provides multiple solutions for use with Green Technologies such as Wind and Solar in Off Grid applications. These are but not limited to: •Pure sine wave, industrial and residential dc to ac inverters off-grid as well as grid tied inverters (which do not require batteries) and UPS systems up to 800kva •MPP solar chargers, standalone within Staunch Inverters/UPS systems •Wind generators and charging controllers •Solar inverters for supplying 3ph power to water pumps •Hybrid uninterruptible power solutions systems -Depending on the customer requirements, and which can include, diesel engine, utility grid, solar panels, wind generators, Lead Acid, NiCad or Lithium batteries with design lifetime ranging from 7 to 20 years

HYBRID POWER GENERATION

Hybrid power systems optimizing efficiency:

Staunch Machinery has developed a leading true hybrid power generator set that can achieve the autonomy of up to 6 months without the need for refueling or maintenance. Staunch hybrid systems can combine up to 5 different sources of power in order to achieve ultimate efficiency. DC Generators with variable speed engines utilize those power sources to power the advanced BTS units used in Staunch Machinery's hybrid unit. Staunch Machinery has achieved significant breakthroughs in the field of Hybrid technology and has become one of the very few companies that have the ability to produce Hybrid Generator sets. Hybrid Generator Sets are made up of a combination of: Diesel/Gas powered generator, battery backup, solar PV panels, and wind turbine, whilst still hosting a main power source. With that combination, Staunch has achieved an efficiency of up to 95% in fuel saving per a full functional set.

MAINTENANCE & AFTERSALES

MAINTENANCE

Staunch has a direct warranty on all its products, with a comprehensive solution package to include extended warranties on client demand. Staunch's maintenance contracts guarantee client satisfaction and ensure mini mal downtime and maximum efficiency around the clock.

INSTALLATION

Upon purchase of a Staunch Power Solution product, Staunch's team of experts will delivery and install the product to ensure that the safety and quality standards are met.

SPARE PARTS

Staunch guarantees the availability of spare parts to all of our products as part of our commitment to our customers. Staunch also provides spare parts to all our branded products around the globe. Parts that end up out of stock are manufactured or obtained within a set time-frame to ensure client satisfaction.

STAUNCH MACHINERY Lebanon Head Office
Lebanon, Saida, Ghazieh main road
Tel/Fax: +961 7 221880 - +961 7 222022
Mobile: +961 3 246635 - 70 932004
info@staunchmachinery.net

STAUNCH MACHINERY - TOGO
Route Nationale N°1 , Togblékopé ,Lomé
19 B.P 394
Tel : +228 22 523580
Mobile : +228 93 888882 / +228 93 888884
info.togo@staunchmachinery.net

STAUNCH MACHINERY - UGANDA
6th street,industrial area,kampala
P.O.Box:2533
land line +256 417 130232
Tel: +256 701 500000, +256 700566666
staunchmachineryug@yahoo.com
staunchug@staunchmachinery.net

STAUNCH MACHINERY - MALI
zone industrulle a cote mali lait
Tel: +223 63 41 11 11, +223 70 70 70 33
+223 73 41 11 11
sales.mali@staunchmachinery.net

STAUNCH MACHINERY ANGOLA
Rua Pedro de Castro Van Dunem (Loy) nº3
Luanda, ANGOLA
Tel : +244 944 444 488
+244 991 336 000
en.logistics@staunchmachinery.net

STAUNCH MACHINERY - YEMEN
Sana'a south 60th street in front of Yemenia
airline office , near safe water company
Tel : +9671 4499882 - +9671 449920
Fax: +9671 449 134
E smartpower-yemen@hotmail.com

STAUNCH MACHINERY - AUSTRALIA
STAUNCH MACHINERY AUSTRALIA PTY
2/3 Merri Concourse
Campbellfield, Victoria,Australia, 3061.
PH:+61 3 93575511 - MOB:+61410122111
info@staunchmachinery.com.au

STAUNCH MACHINERY - USA
Holt Blvd, Montclair, CA 91763
Tel/Fax: (909)900-0000
Mobile: 562-644-4455
sam@staunchmachinery.net